Main Menu

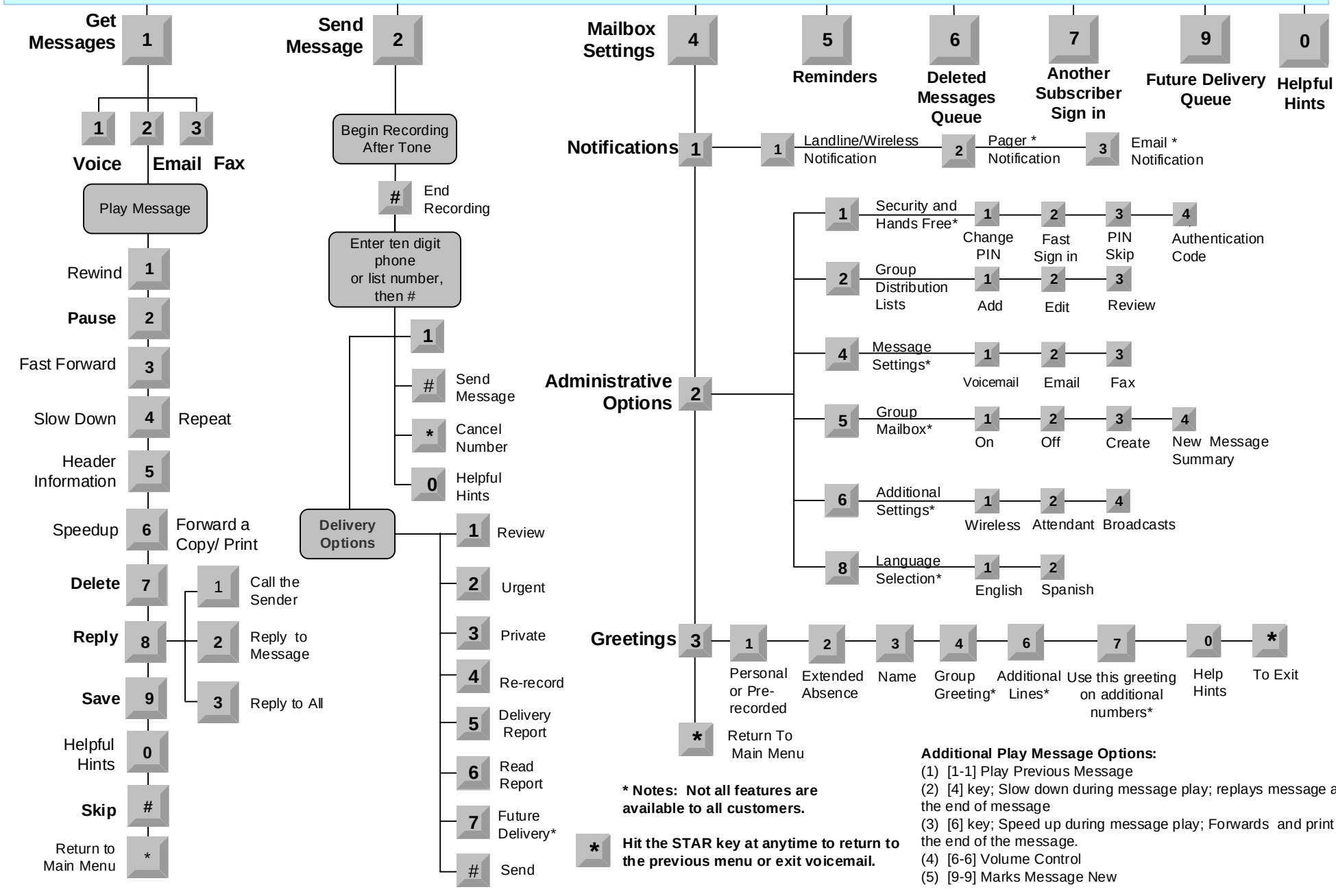

*** Notes: Not all features are available to all customers.**

* **Hit the STAR key at anytime to return to the previous menu or exit voicemail.**

Additional Play Message Options:

(1) [1-1] Play Previous Message

(2) [4] key; Slow down during message play; replays message at the end of message

(3) [6] key; Speed up during message play; Forwards and print at the end of the message.

(4) [6-6] Volume Control

(5) [9-9] Marks Message New